JVC

SCHEMATIC DIAGRAMS

COLOUR TELEVISION

BASIC CHASSIS
MF II

AV32H20EUS
AV28H20EUS
AV28H20EUB

CD-ROM No.SML200205

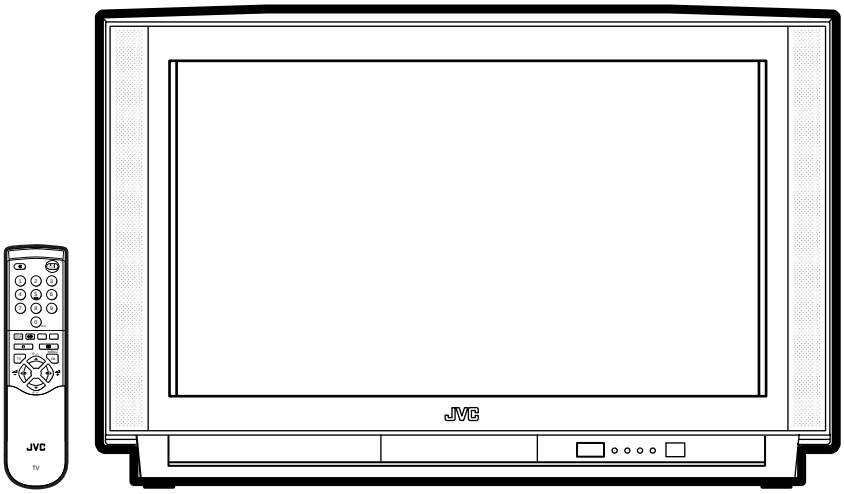

InteriArt
Natural Vision
T-V LINK

CONTENTS

■ NOTE ON USING CIRCUIT DIAGRAMS ---------- 2-1
■ SEMICONDUCTOR SHAPES ---------- 2-2
■ BLOCK DIAGRAM ---------- 2-3
■ CIRCUIT DIAGRAMS ---------- 2-5
■ PATTERN DIAGRAMS ---------- 2-21

COPYRIGHT © 2002 VICTOR COMPANY OF JAPAN, LTD.

No.51945
May 2002

***FRONT CONTROL PWB PATTERN* [2/2]**

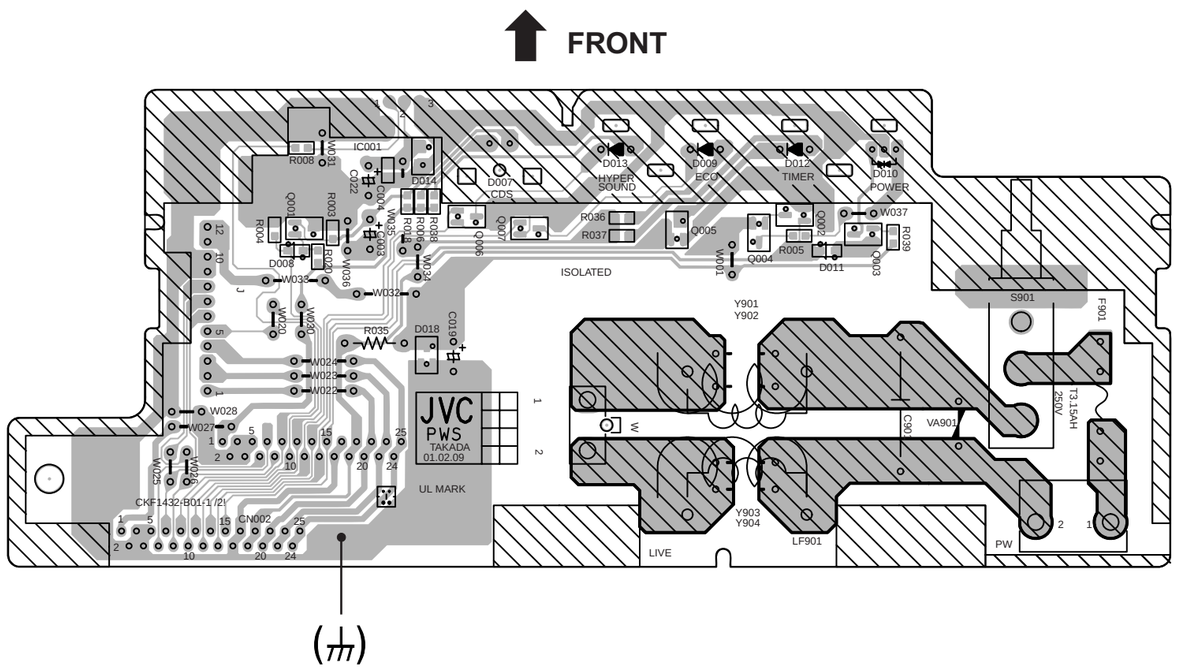

VP0205
DP8080

AV32H20EUS
AV28H20EUS
AV28H20EUB

AV32H20EUS / AV28H20EUS / AV28H20EUB
STANDARD CIRCUIT DIAGRAM

■ NOTE ON USING CIRCUIT DIAGRAMS

1.SAFETY

The components identified by the ⚠ symbol and shading are critical for safety. For continued safety replace safety critical components only with manufactures recommended parts.

2.SPECIFIED VOLTAGE AND WAVEFORM VALUES

The voltage and waveform values have been measured under the following conditions.

(1)Input signal	: Colour bar signal
(2)Setting positions of each knob/button and variable resistor	: Original setting position when shipped
(3)Internal resistance of tester	:DC 20kΩ/V
(4)Oscilloscope sweeping time	:H ⇒ 20μS/div
	:V ⇒ 5mS/div
	:Others ⇒ Sweeping time is specified
(5)Voltage values	:All DC voltage values

∗ Since the voltage values of signal circuit vary to some extent according to adjustments, use them as reference values.

3.INDICATION OF PARTS SYMBOL [EXAMPLE]

● In the PW board :R1209 → R209

4.INDICATIONS ON THE CIRCUIT DIAGRAM

(1)Resistors

● Resistance value

No unit	:[Ω]
K	:[K Ω]
M	:[M Ω]

● Rated allowable power

No indication	:1/ 16 [W]
Others	:As specified

● Type

No indication	:Carbon resistor
OMR	:Oxide metal film resistor
MFR	:Metal film resistor
MPR	:Metal plate resistor
UNFR	:Uninflammable resistor
FR	:Fusible resistor

∗ Composition resistor 1/2 [W] is specified as 1/2S or Comp.

(2)Capacitors

● Capacitance value

1 or higher	:[pF]
less than 1	:[μF]

● Withstand voltage

No indication	:DC50[V]
Others	:DC withstand voltage [V]
AC indicated	:AC withstand voltage [V]

∗ Electrolytic Capacitors
47/50[Example]:Capacitance value [μF]/withstand voltage[V]

● Type

No indication	:Ceramic capacitor
MM	:Metalized mylar capacitor
PP	:Polypropylene capacitor
MPP	:Metalized polypropylene capacitor
MF	:Metalized film capacitor
TF	:Thin film capacitor
BP	:Bipolar electrolytic capacitor
TAN	:Tantalum capacitor

(3)Coils

No unit	:[μH]
Others	:As specified

(4)Power Supply

:B1 :B2 (12V)
:9V :5V

∗Respective voltage values are indicated

(5)Test point

:Test point :Only test point display

(6)Connecting method

:Connector :Wrapping or soldering
:Receptacle

(7)Ground symbol

⊥ :LIVE side ground
⏚ :ISOLATED(NEUTRAL) side ground
⏚ :EARTH ground
⏚ :DIGITAL ground

5.NOTE FOR REPAIRING SERVICE

This model's power circuit is partly different in the GND. The difference of the GND is shown by the LIVE : (⊥) side GND and the ISOLATED(NEUTRAL) : (⏚) side GND.Therefore, care must be taken for the following points.

(1)Do not touch the LIVE side GND or the LIVE side GND and the ISOLATED(NEUTRAL) side GND simultaneously. If the above caution is not respected, an electric shock may be caused. Therefore, make sure that the power cord is surely removed from the receptacle when, for example, the chassis is pulled out.

(2)Do not short between the LIVE side GND and ISOLATED(NEUTRAL) side GND or never measure with a measuring apparatus measure with a measuring apparatus (oscilloscope, etc.) the LIVE side GND and ISOLATED(NEUTRAL) side GND at the same time. If the above precaution is not respected , a fuse or any parts will be broken.

◇ **Since the circuit diagram is a standard one, the circuit and circuit constants may be subject to change for improvement without any notice.**

NOTE

◇ **Due improvement in performance, some part numbers show in the circuit diagram may not agree with those indicated in the part list.**
When ordering parts, please use the numbers that appear in the Parts List.

CONTENTS

SEMICONDUCTOR SHAPES ---------- 2-2

BLOCK DIAGRAM ---------- 2-3

CIRCUIT DIAGRAMS

MAIN PWB CIRCUIT DIAGRAM ---------- 2-5
POWER & DEF PWB CIRCUIT DIAGRAM ---------- 2-9
AV SW PWB CIRCUIT DIAGRAM ---------- 2-11
MICOM PWB CIRCUIT DIAGRAM ---------- 2-13
100Hz PWB CIRCUIT DIAGRAM ---------- 2-15
CRT SOCKET PWB CIRCUIT DIAGRAM ---------- 2-17
FRONT CONTROL PWB CIRCUIT DIAGRAM ---------- 2-19

PATTERN DIAGRAMS

MAIN PWB PATTERN ---------- 2-21
POWER & DEF PWB PATTERN ---------- 2-23
AV SW PWB PATTERN ---------- 2-25
CRT SOCKET PWB PATTERN ---------- 2-26
MICOM PWB PATTERN ---------- 2-27
100Hz PWB PATTERN ---------- 2-29
FRONT CONTROL PWB PATTERN [1/2] ---------- 2-31
FRONT CONTROL PWB PATTERN [2/2] ---------- 2-32

SEMICONDUCTOR SHAPES

TRANSISTOR

BOTTOM VIEW	FRONT VIEW				TOP VIEW
E C B	E C B	B C E (G)(D)(S)	E C B	E C B	CHIP TR C B E

IC

BOTTOM VIEW	FRONT VIEW			TOP VIEW
OUT E IN	IN E OUT	1 → N	1 → N	1 N

CHIP IC

TOP VIEW		
N N N 1 N	1 N	

***FRONT CONTROL PWB PATTERN* [1/2]**

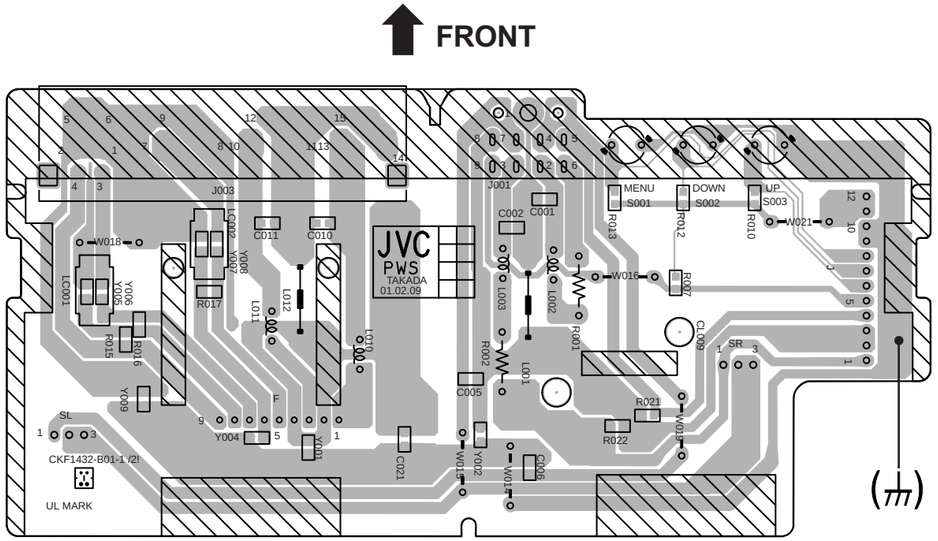

AV32H20EUS
AV28H20EUS
AV28H20EUB

BLOCK DIAGRAM

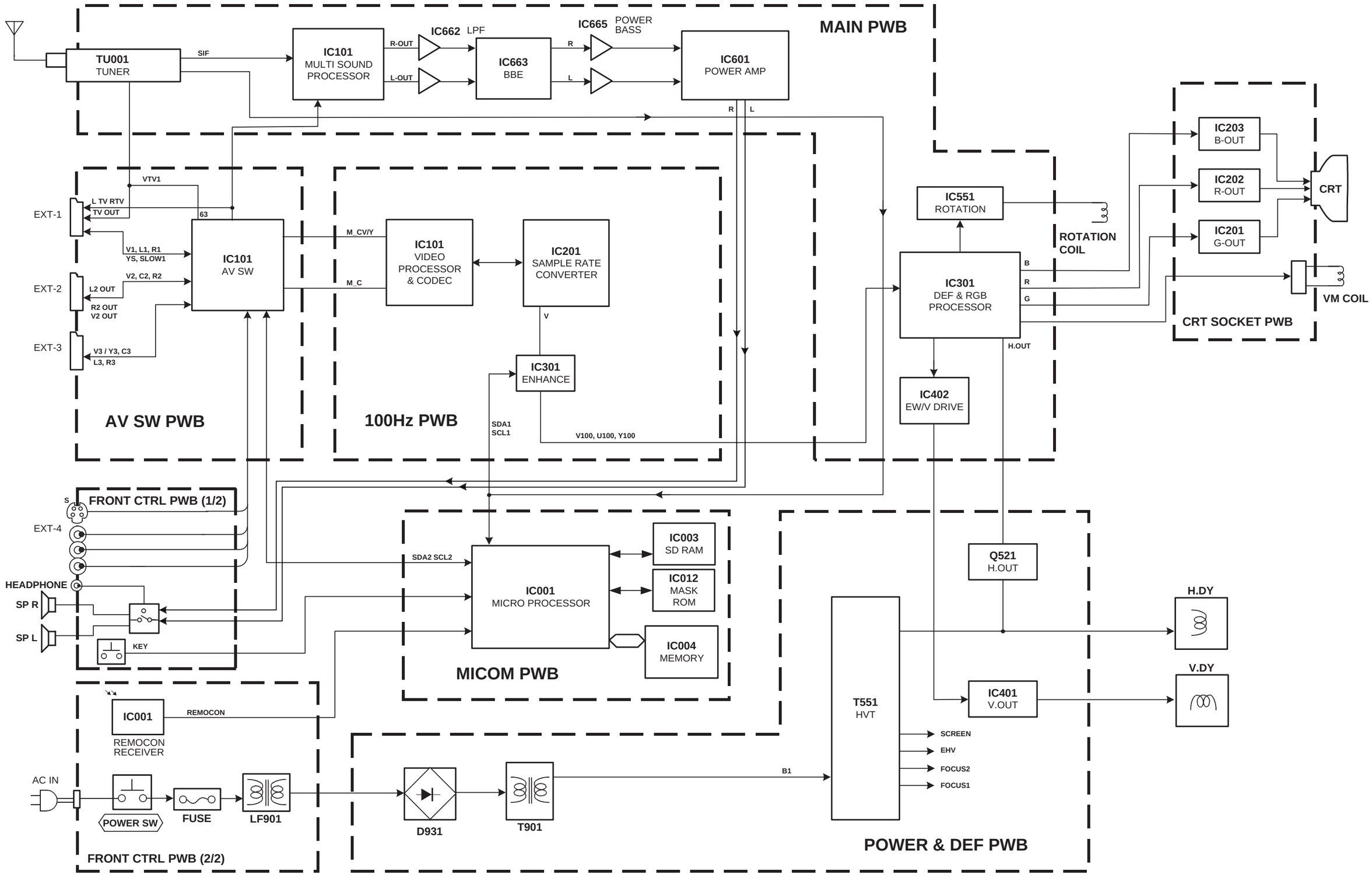

AV32H20EUS
AV28H20EUS
AV28H20EUB

CIRCUIT DIAGRAMS *MAIN PWB CIRCUIT DIAGRAM* [1/2]

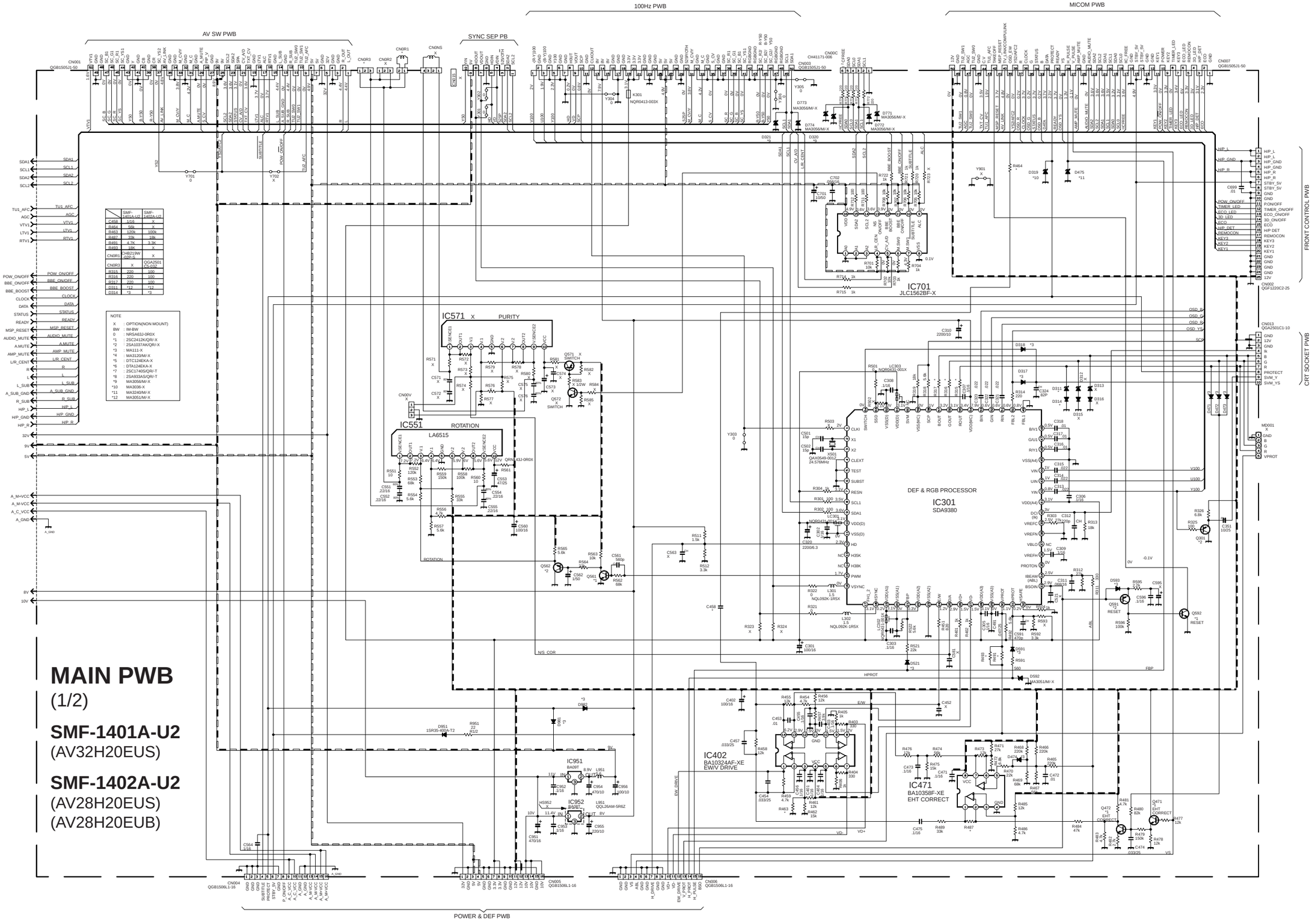

AV32H20EUS
AV28H20EUS
AV28H20EUB

MAIN PWB CIRCUIT DIAGRAM [2/2]

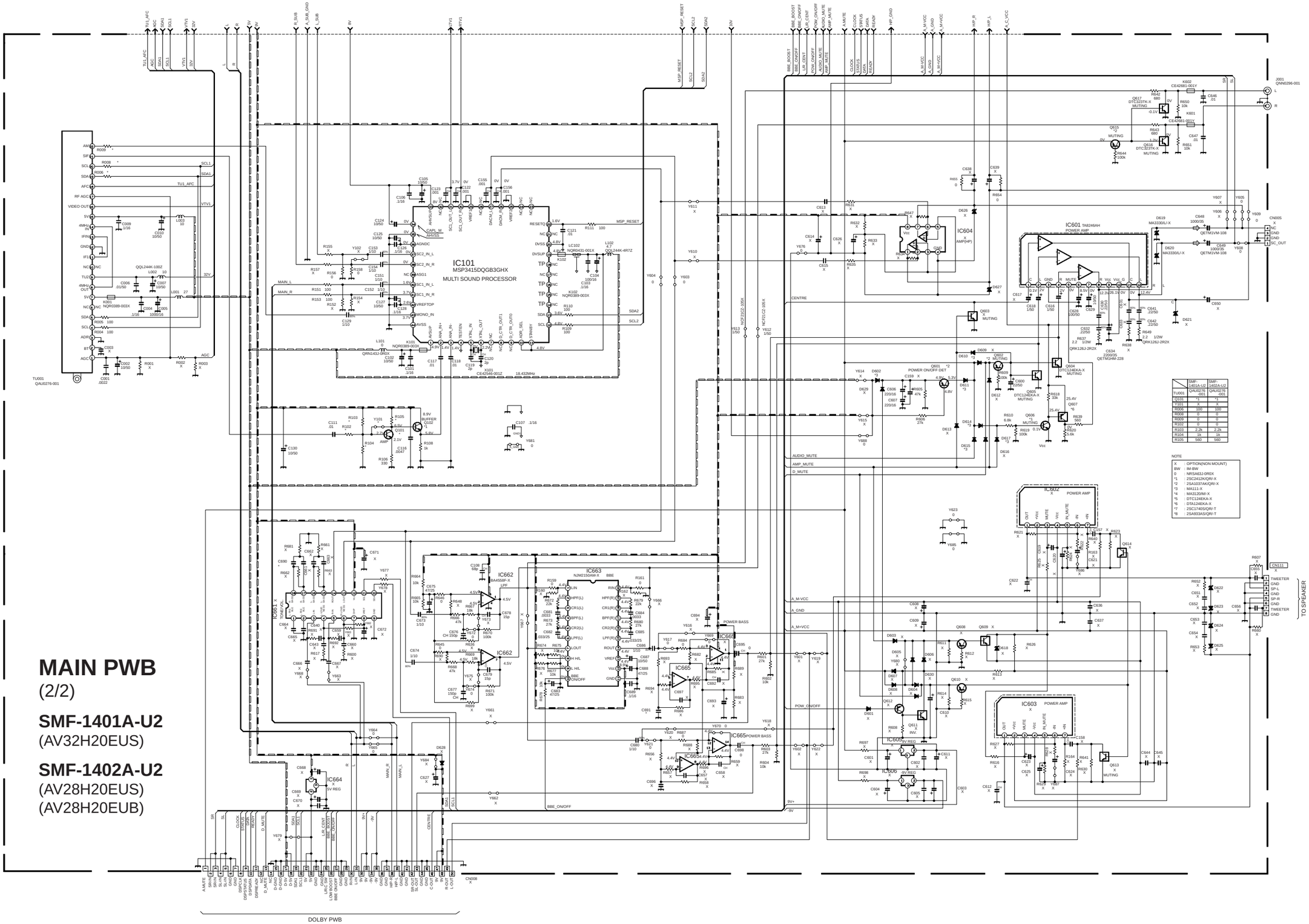

	SMF-1401A-U2	SMF-1402A-U2
TU001	QAU0276-001	QAU0276-001
Q101	*	*
Y101	X	X
R005	100	100
R008	0	0
R009	0	0
R002	0	0
R103	2.2k	2.2k
R104	1k	1k
R105	560	560

NOTE

X	: OPTION(NON MOUNT)
BW	: IM-BW
0	: NRSA63J-0R0X
*1	: 2SC2412KQ/R/-X
*2	: 2SA1037AKQ/R/-X
*3	: MA111-X
*4	: MA3120M/-X
*5	: DTC124EKA-X
*6	: DTA124EKA-X
*7	: 2SC1740SQ/R/-T
*8	: 2SA933ASQ/R/-T

MAIN PWB

(2/2)

SMF-1401A-U2
(AV32H20EUS)

SMF-1402A-U2
(AV28H20EUS)
(AV28H20EUB)

AV32H20EUS
AV28H20EUS
AV28H20EUB

POWER & DEF PWB CIRCUIT DIAGRAM

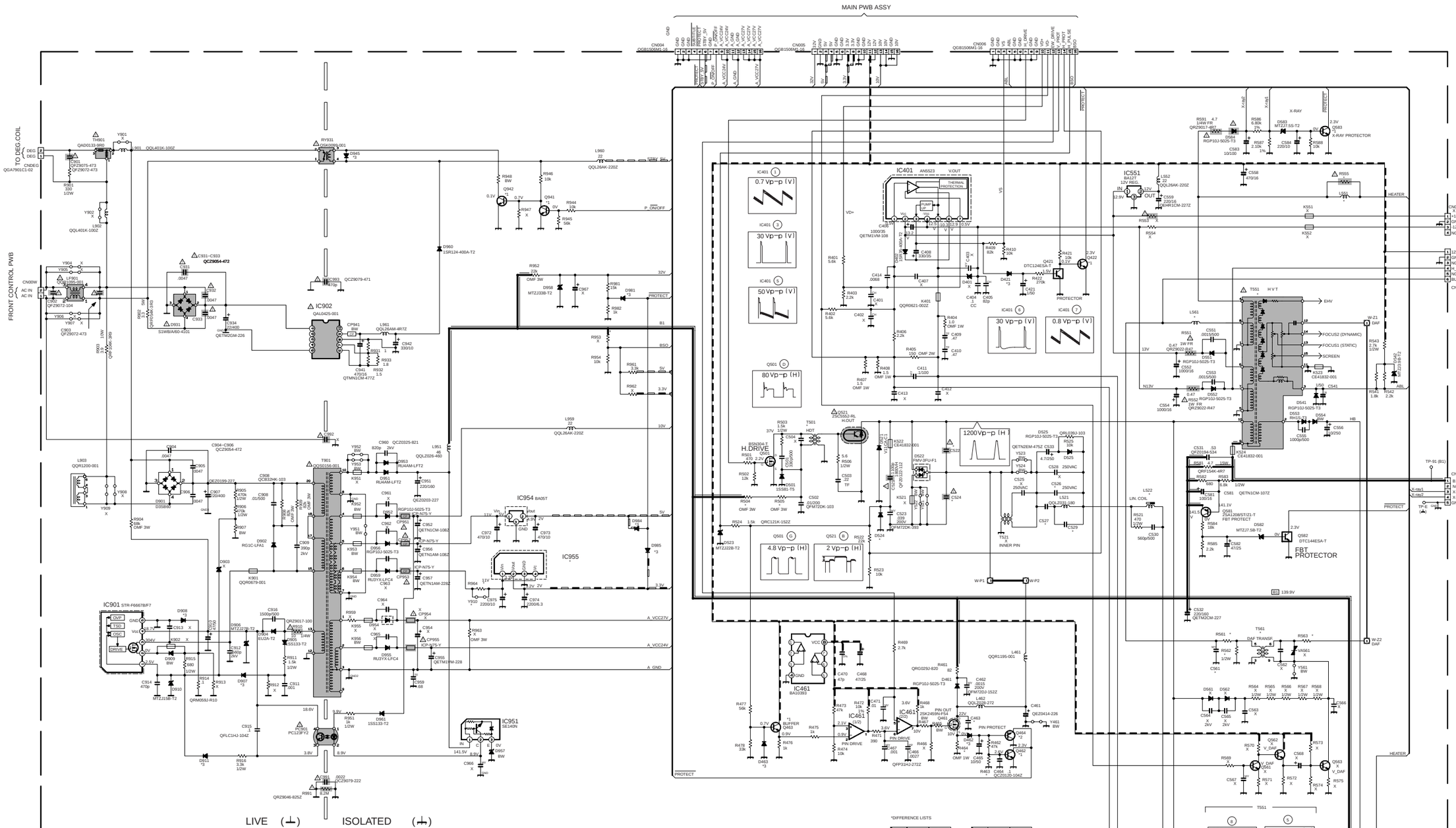

POWER & DEF PWB

SMF-2401A-U2 (AV32H20EUS)

SMF-2402A-U2 (AV28H20EUS / AV28H20EUB)

■ NOTE
*1 : 2SC1740S/QR/-T
*2 : 2SA933AS/QR/-T
*3 : 1SS133-T2
BW: BUS WIRE
X : NON MOUNT (OPTION)

*DIFFERENCE LISTS

	SMF-2401A-U2	SMF-2402A-U2
R407	QRX01GJ-282	QRX01GJ-185
R463	6.8k	QRA14CF-5101Y
R464	QRX01GJ-383	QRX01GJ-287
R504	QRL03GJ-222	QRL03GJ-272
R505	QRL03GJ-272	QRL03GJ-332
△ R555	QRZ9022-R33	X
R561	QRS0101J-220	X
R562	12K 1/2W	X
R563	QRZ0056-103Z	X
R586	QRA14CF-6201Y	QRA14CF-7561Y
R587	QRA14CF-2801Y	QRA14CF-2101Y
R964	X	X
C463	QFM72DJ-122Z	QFM72DJ-162Z
△ C522	QFZ0200-123	QFZ0200-113

	SMF-2401A-U2	SMF-2402A-U2
△ C524	QFP32JJ-181	QFP32JJ-221
C526	QFZ0197-204	QFZ0197-184
C527	QFZ0194-154	QFZ0197-124
C529	QFZ0194-154	QFZ0197-154
C561	.022/100	X
D524	1SR35-400A-T2	X
L522	QOR1193-001	QOR1191-002
L551	X	QOL2026-540
L561	QOL2028-272	X
T501	QQR0882-001	QQR1111-001
T551	QQH0127-001	QQH0126-003
T561	QQR0881-001	X
Y910	BW	BW
IC956	PQJ3RD13	PQJ0RD13

AV32H20EUS
AV28H20EUS
AV28H20EUB

AV SW PWB CIRCUIT DIAGRAM

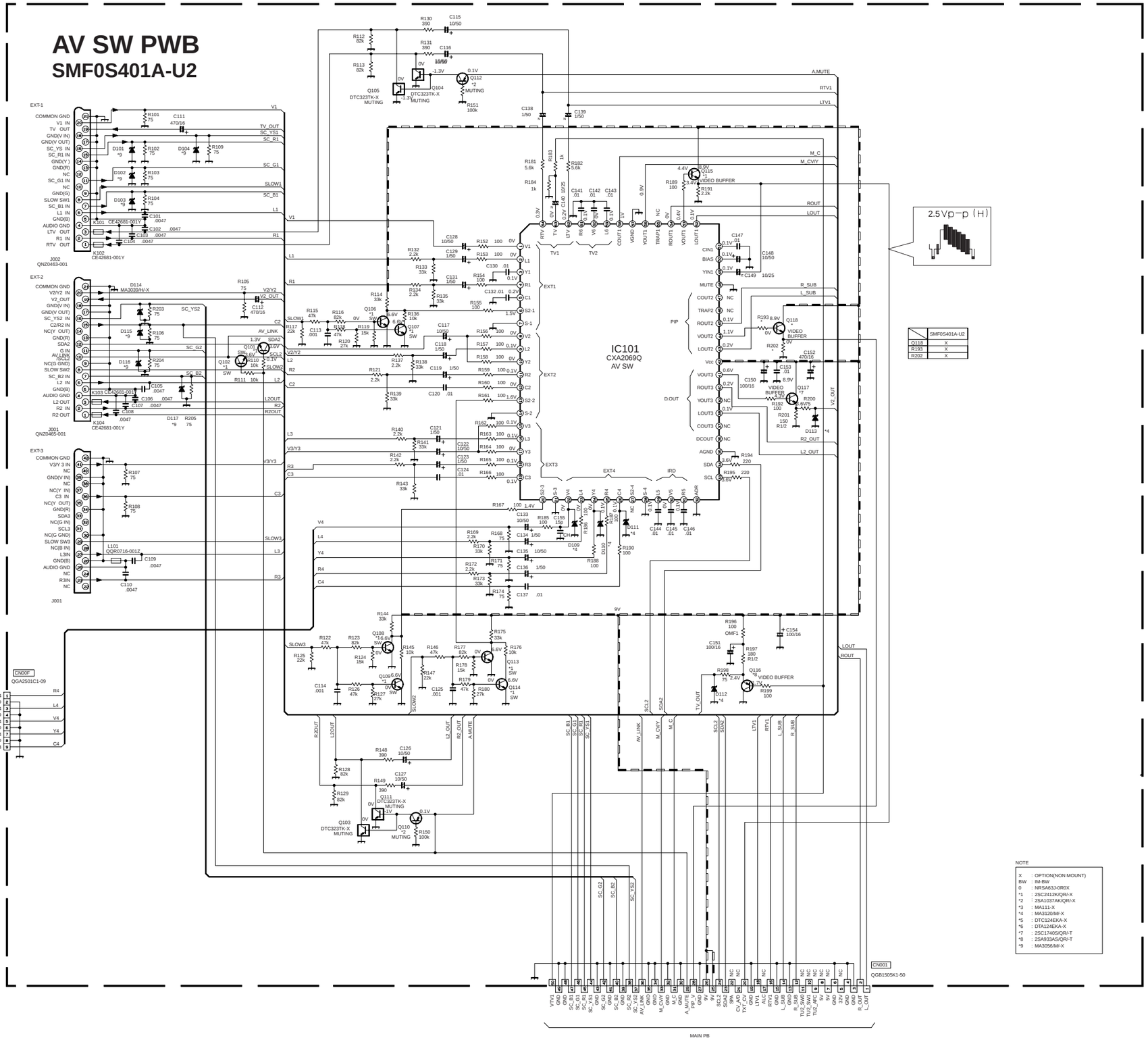

AV32H20EUS
AV28H20EUS
AV28H20EUB

AV32H20EUS
AV28H20EUS
AV28H20EUB

MICOM PWB CIRCUIT DIAGRAM

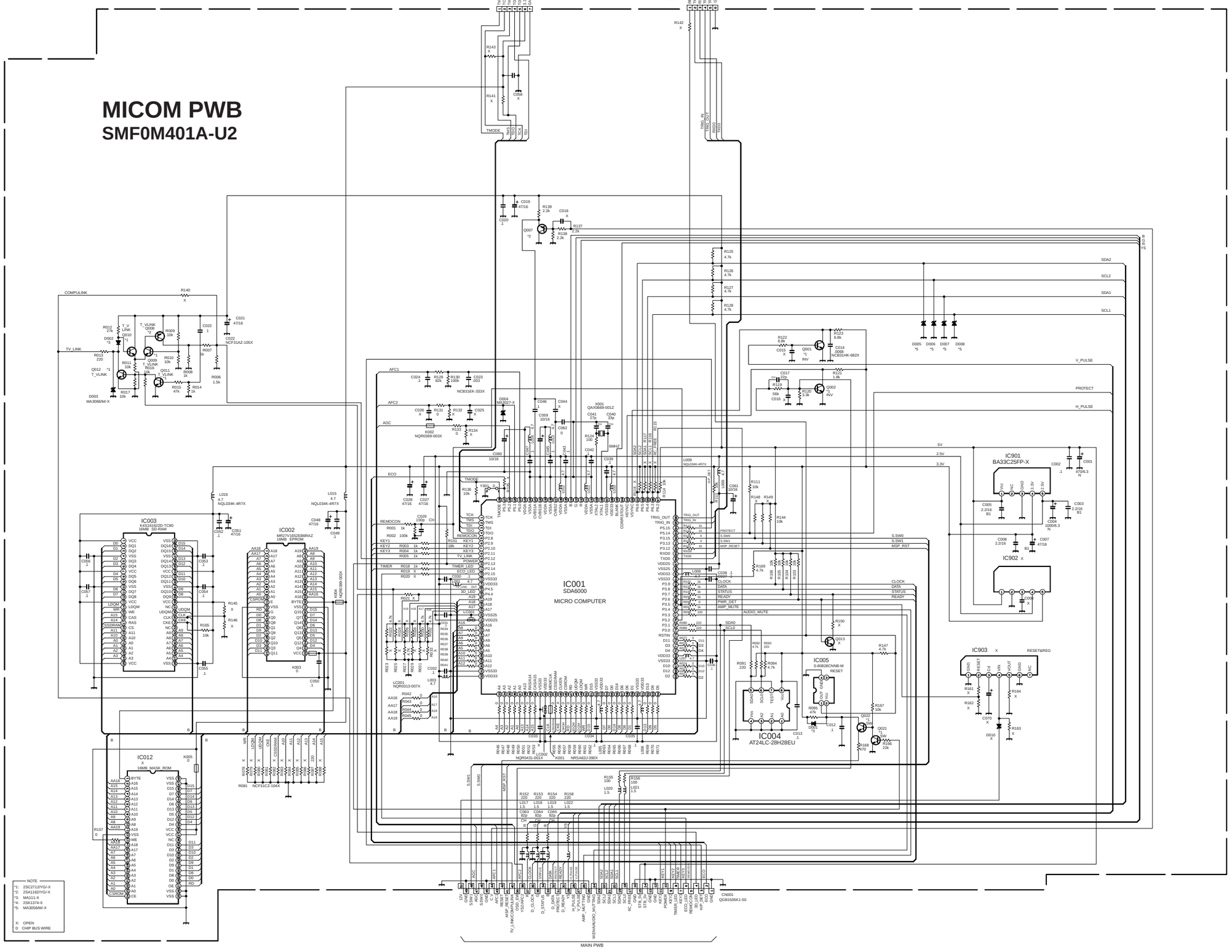

AV32H20EUS
AV28H20EUS
AV28H20EUB

100Hz PWB CIRCUIT DIAGRAM

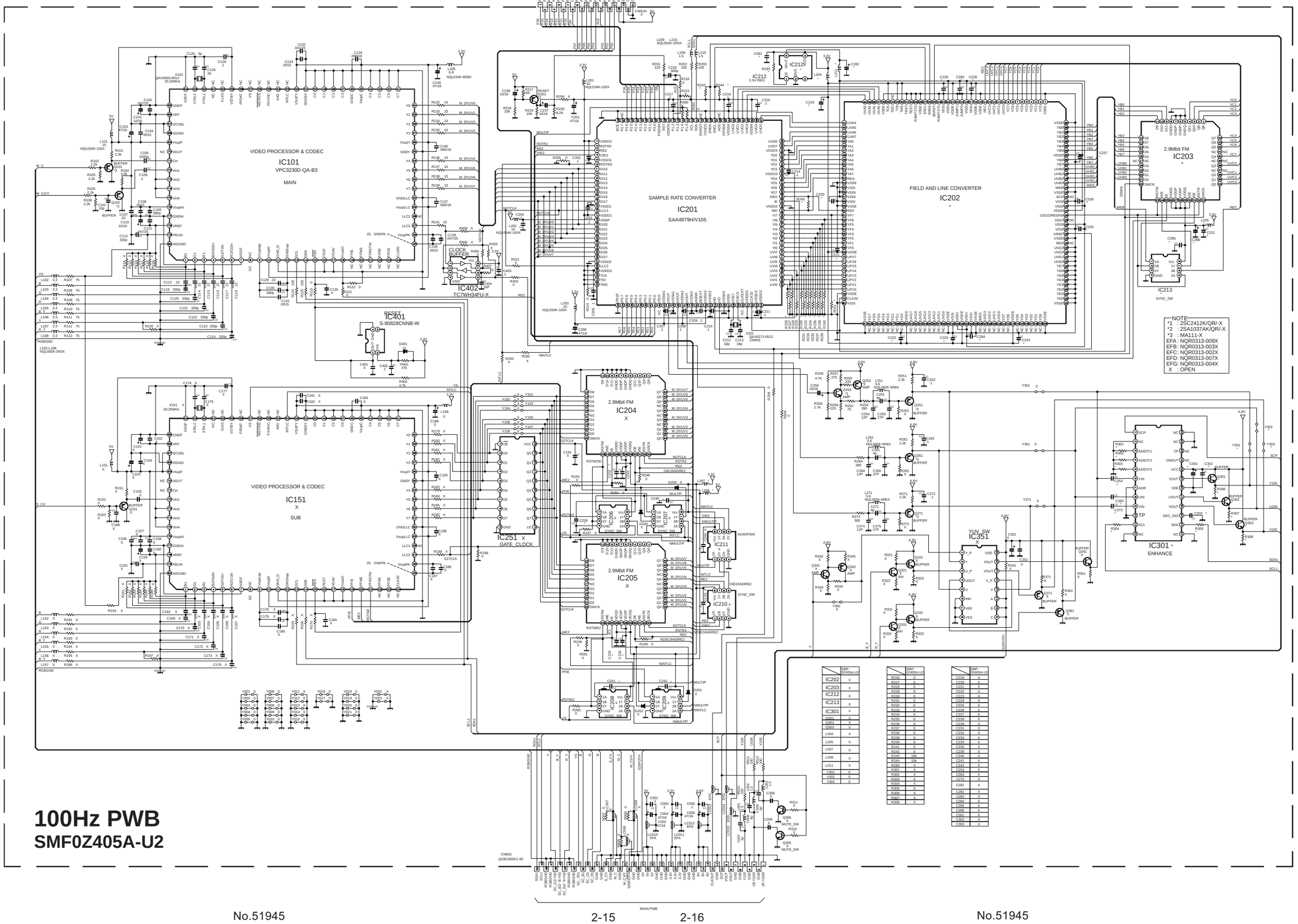

100Hz PWB

SMF0Z405A-U2

AV32H20EUS
AV28H20EUS
AV28H20EUB

CRT SOCKET PWB CIRCUIT DIAGRAM

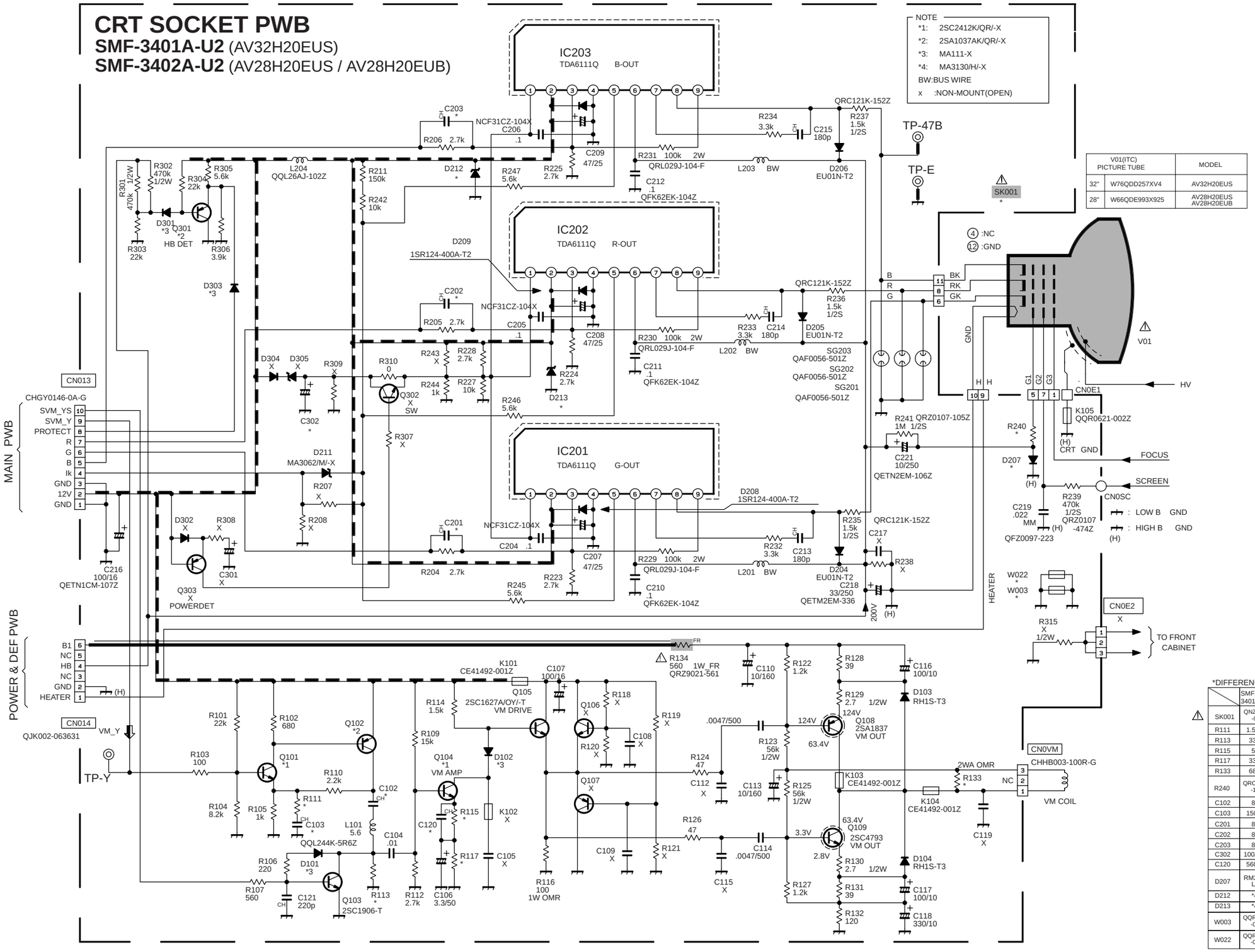

V01(ITC) PICTURE TUBE		MODEL
32"	W76QDD257XV4	AV32H20EUS
28"	W66QDE993X925	AV28H20EUS AV28H20EUB

*DIFFERENCE LISTS

	SMF-3401A-U2	SMF-3402A-U2
SK001	QNZ0380 -001	QNZ0464 -001
R111	1.5k	470
R113	330	1.5k
R115	56	39
R117	330	330
R133	680	680
R240	QRC121K -102Z	QRC121K -102Z
C102	8p	6p
C103	150p	39p
C201	8p	10p
C202	8p	10p
C203	8p	10p
C302	100/10	47/50
C120	560p	220p
D207	RM2C-LFA1	RM2C-LFA1
D212	*4	X
D213	*4	X
W003	QQR0679 -001	QQR0679 -001
W022	QQR0679 -001	QQR0679 -001

AV32H20EUS
AV28H20EUS
AV28H20EUB

FRONT CONTROL PWB CIRCUIT DIAGRAM

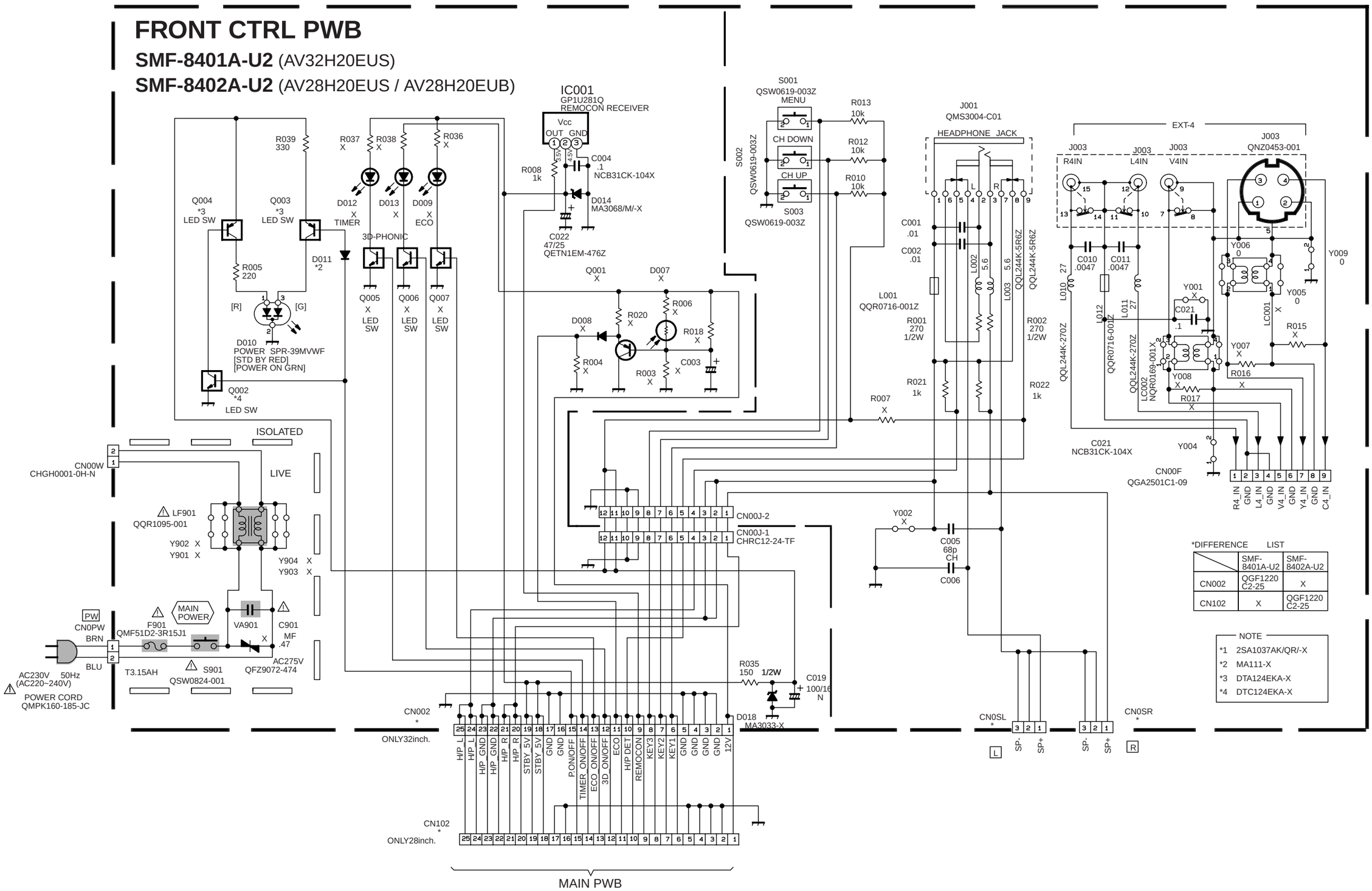

AV32H20EUS
AV28H20EUS
AV28H20EUB

PATTERN DIAGRAMS *MAIN PWB PATTERN*

FRONT

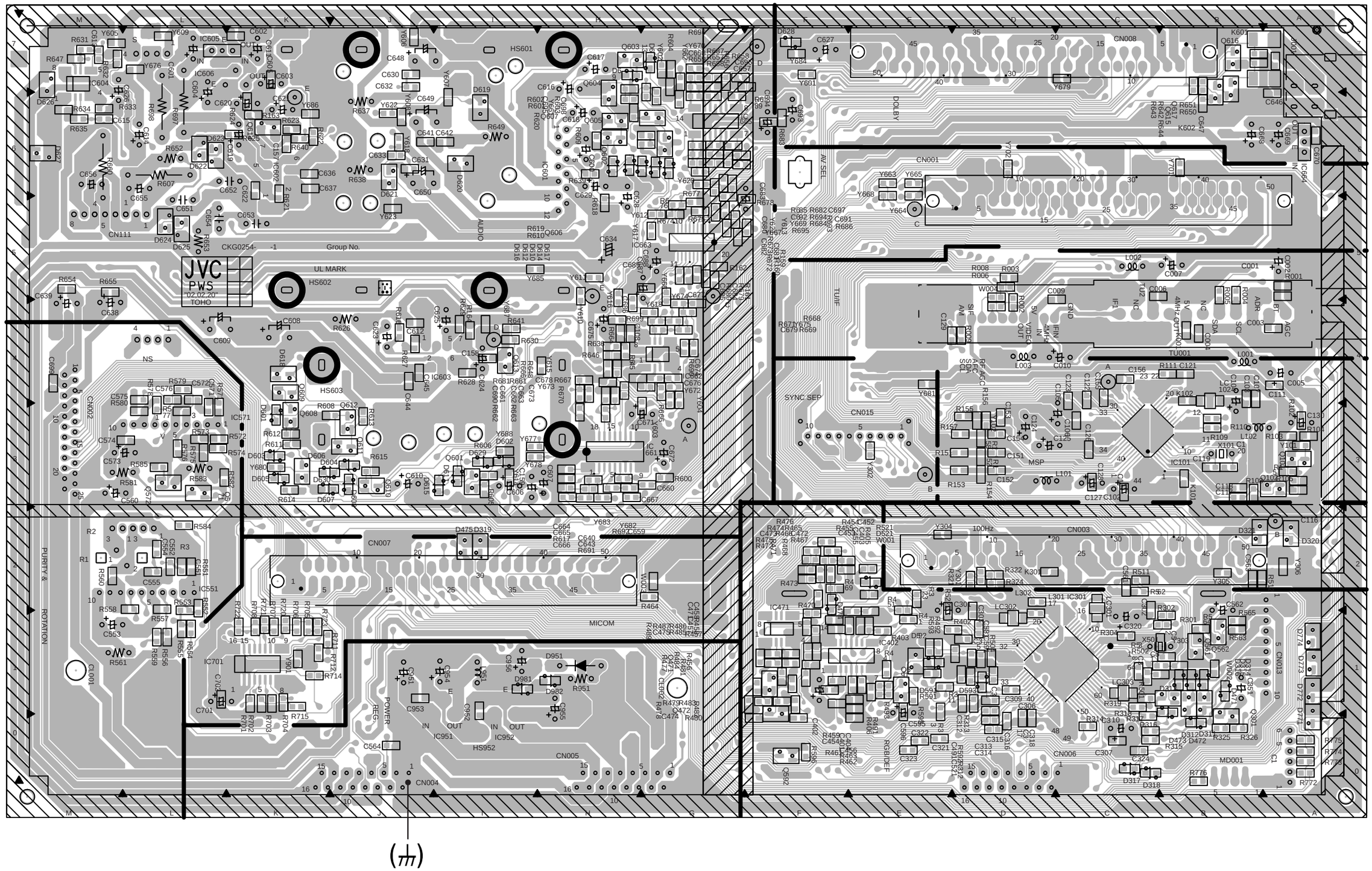

AV32H20EUS
AV28H20EUS
AV28H20EUB

POWER & DEF PWB PATTERN

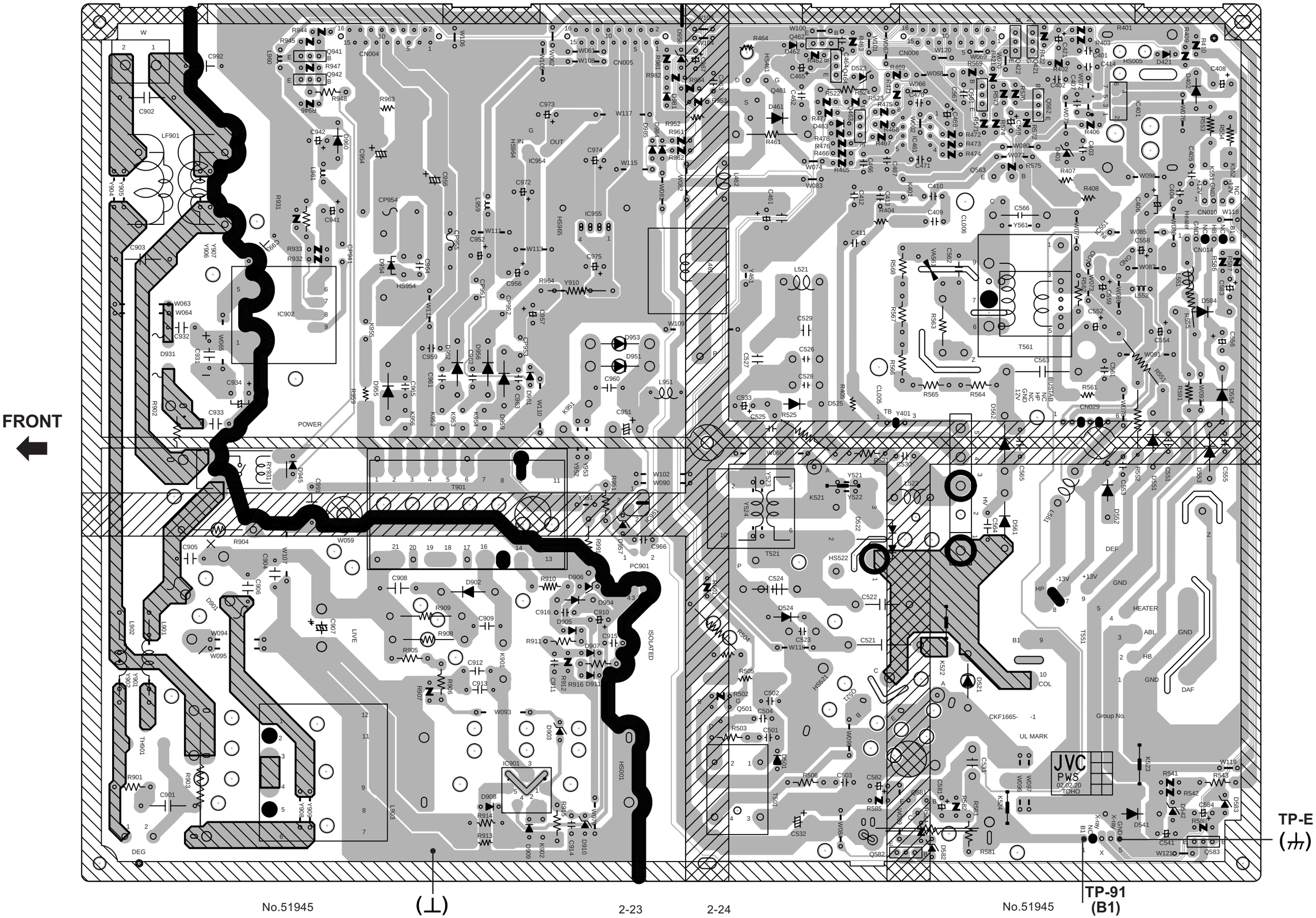

AV32H20EUS
AV28H20EUS
AV28H20EUB

AV SW PWB PATTERN

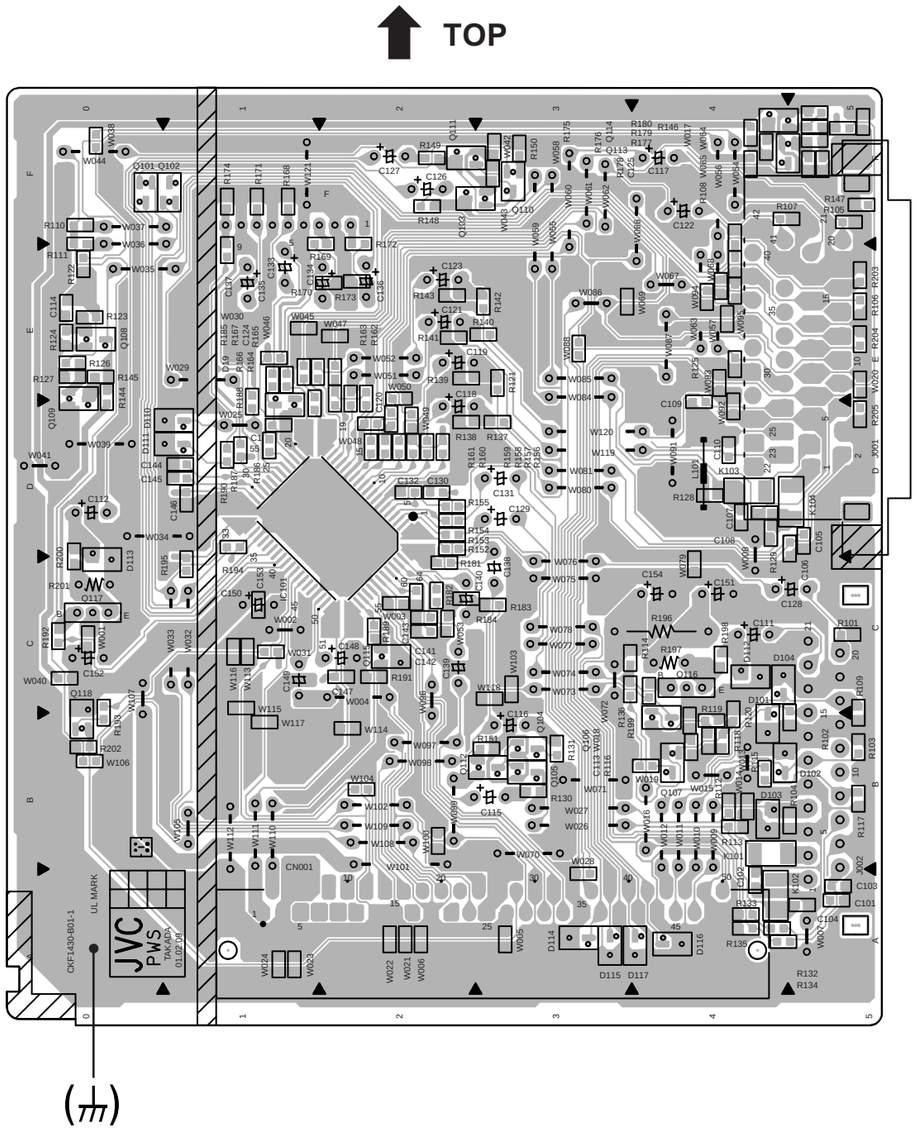

CRT SOCKET PWB PATTERN

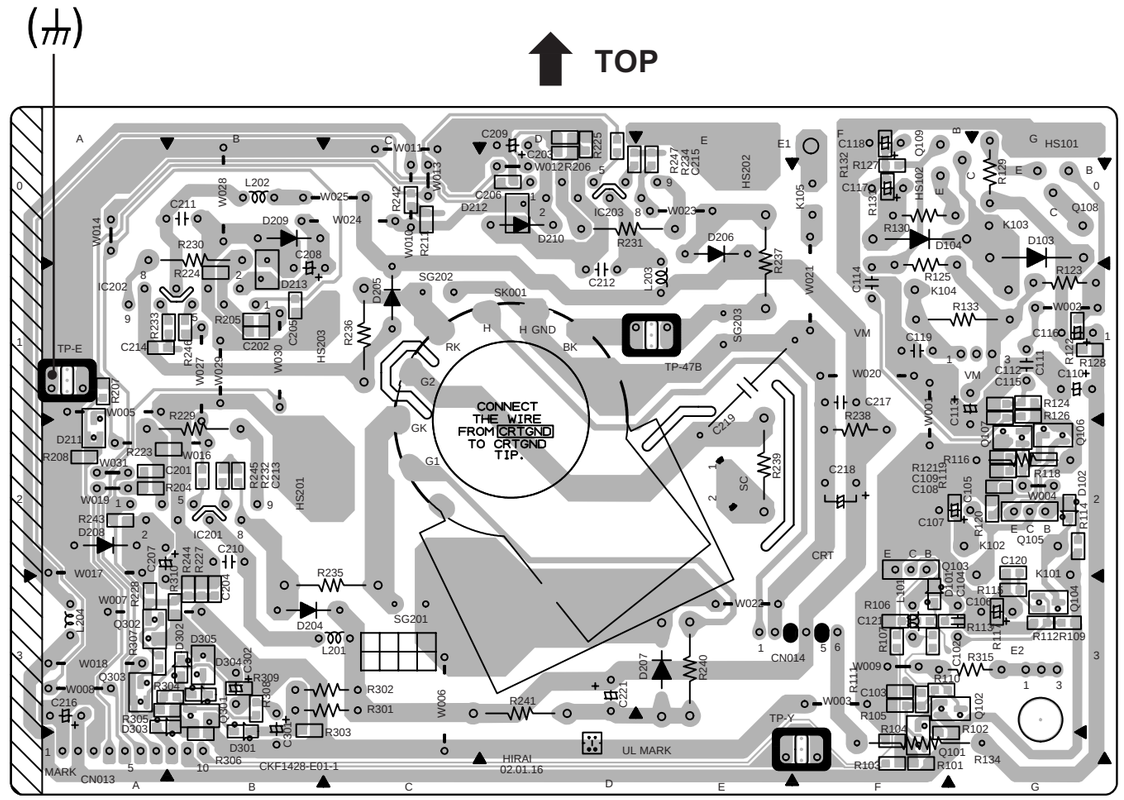

AV32H20EUS
AV28H20EUS
AV28H20EUB

MICOM PWB PATTERN

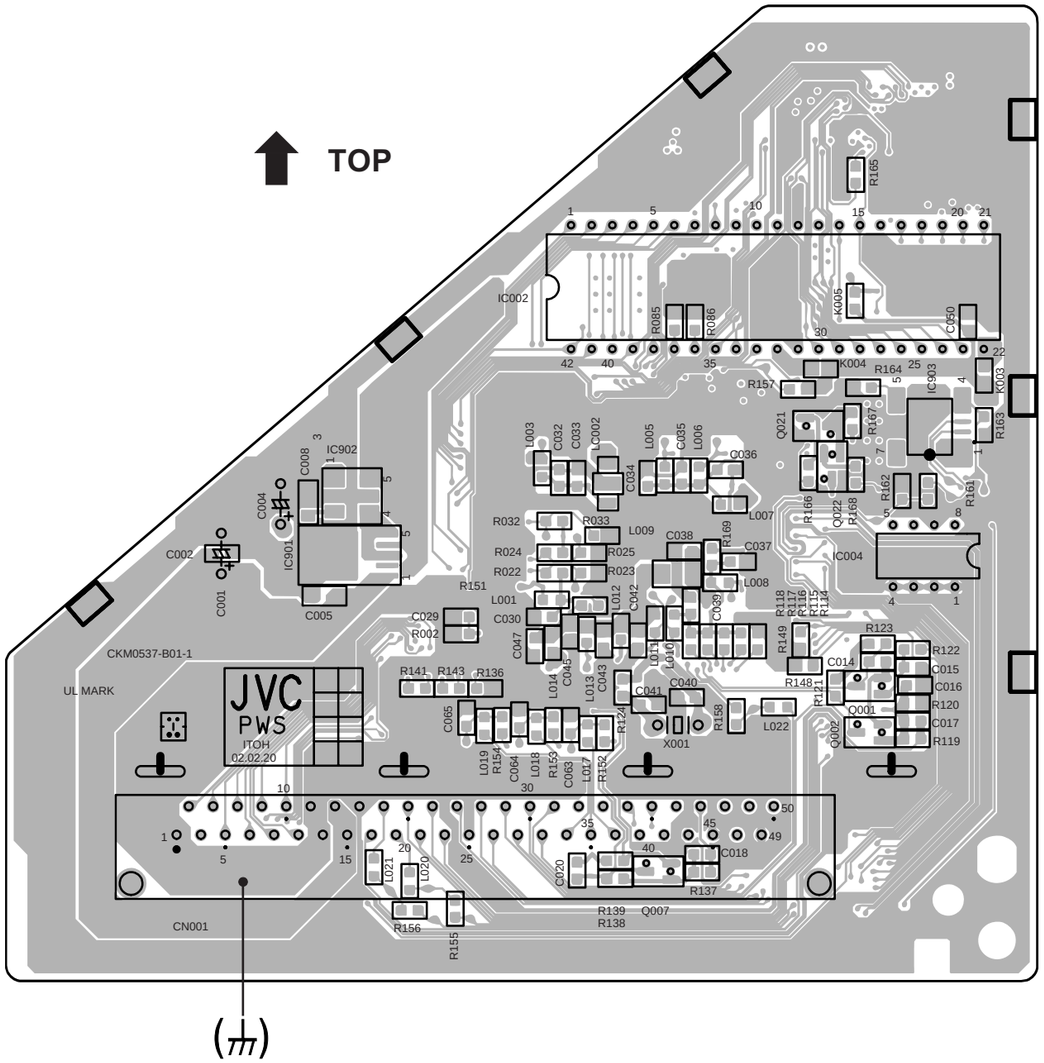

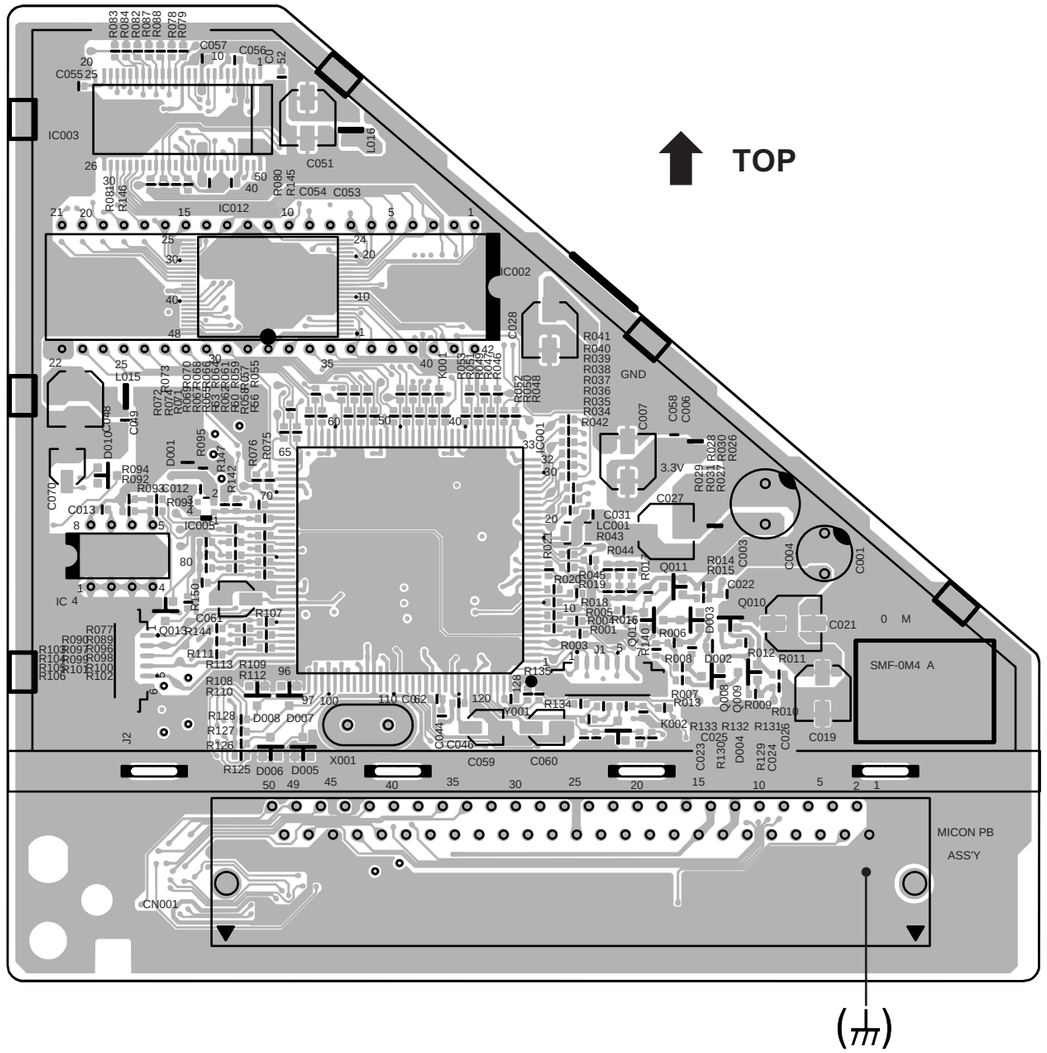

AV32H20EUS
AV28H20EUS
AV28H20EUB

100Hz PWB PATTERN

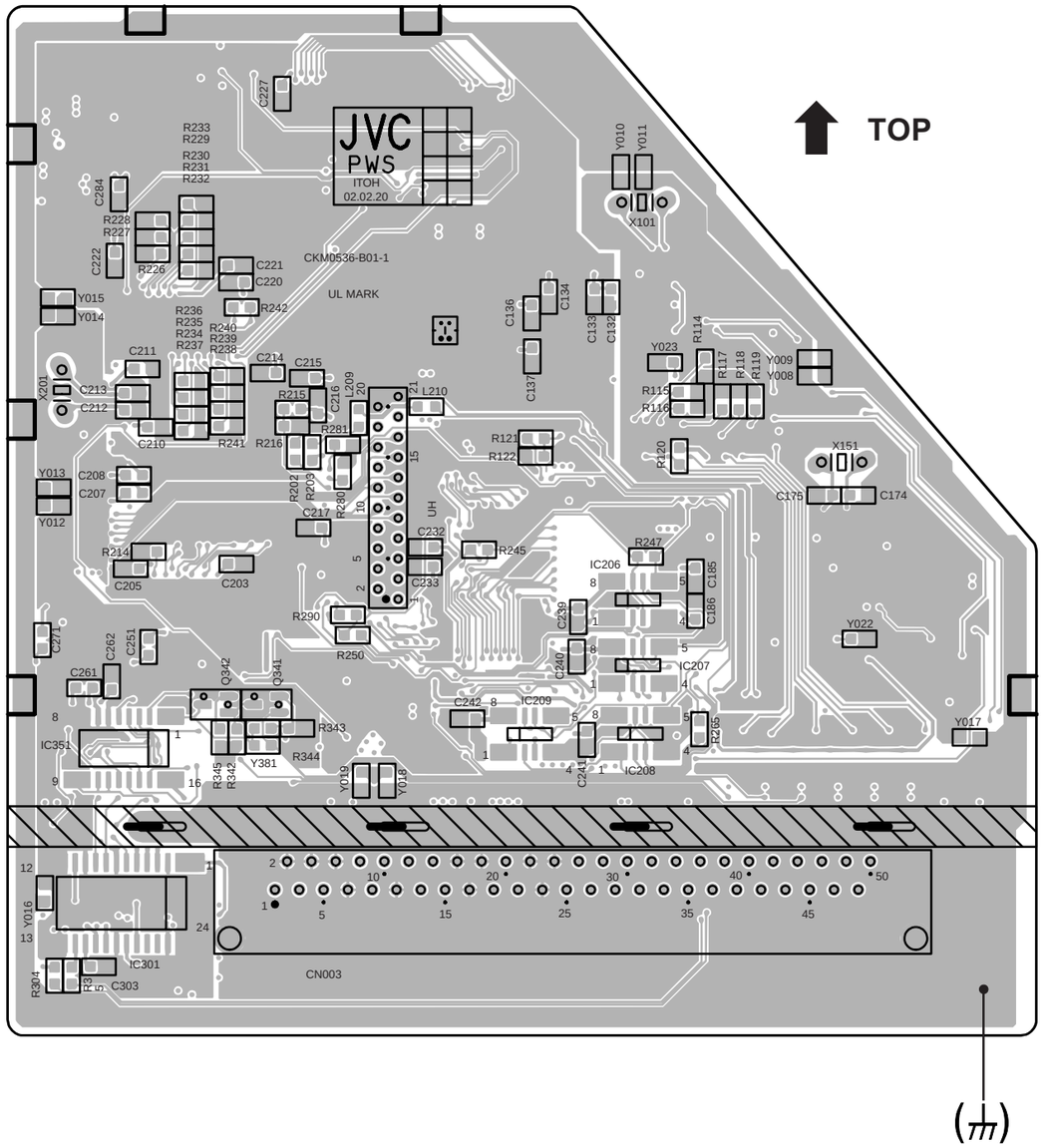

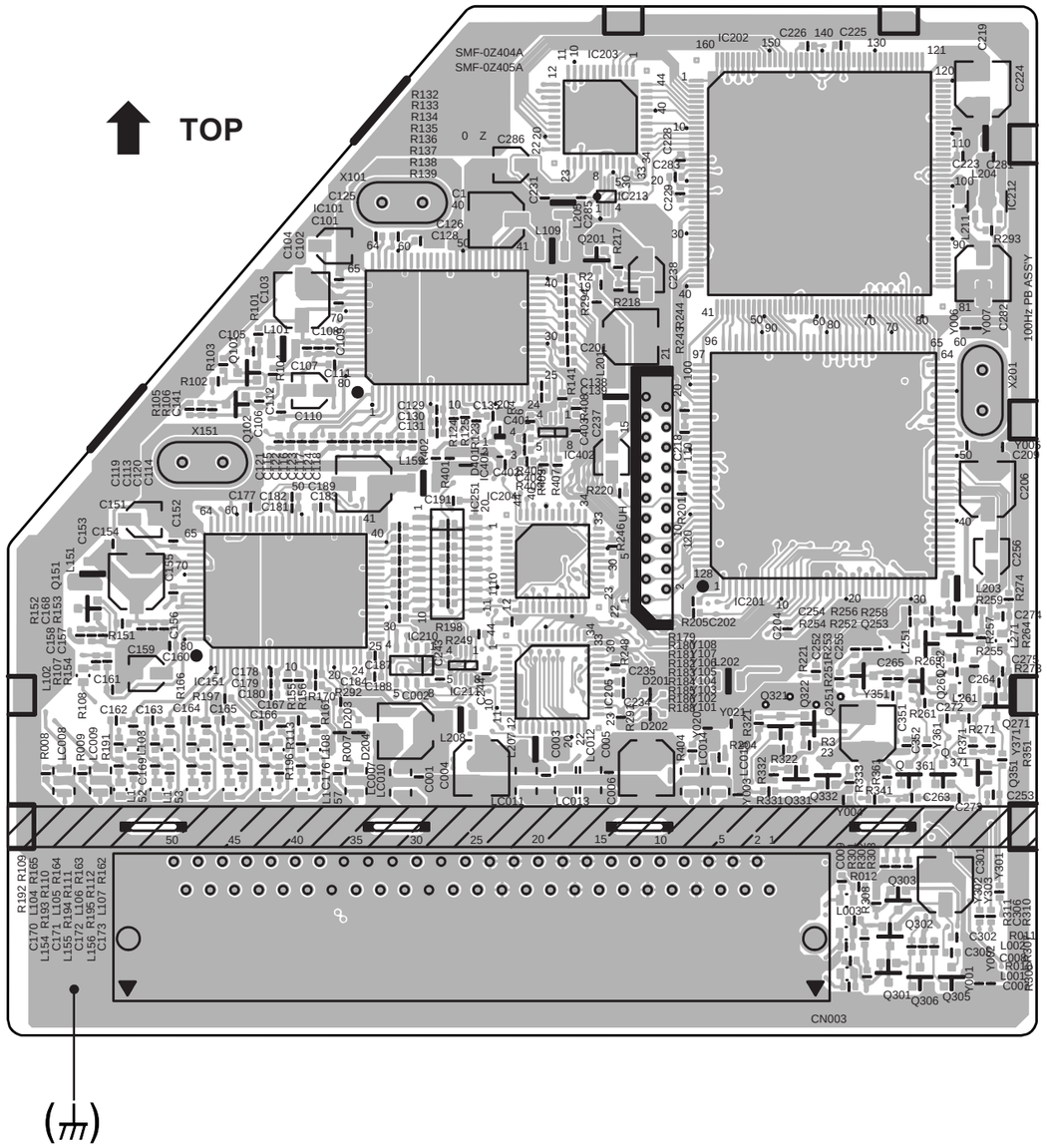

VICTOR COMPANY OF JAPAN, LIMITED
HOME AV NETWORK BUSINESS UNIT. 12, 3-chome, Moriya-cho, Kanagawa-ku, Yokohama, Kanagawa-prefecture, 221-8528, Japan

Printed in Japan
VP 0205
DP8080